RL 左右通用 | 锌合金 Zinc alloy | IP54

型号 (Model)

密码锁

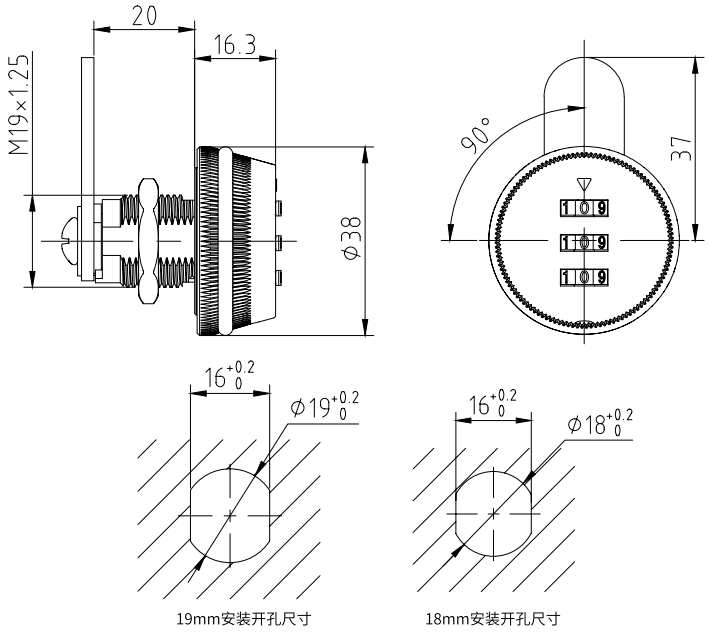

1. 材质 : 锌合金壳体、旋钮、字轮 , 碳钢锁片 / 钩
2. 表面处理：壳体、旋钮镀铬 / 镀黑 , 字轮镀镍 , 锁片镀镍 , 外表颜色可按要求定制
3. 功能及用途 : 手柄旋转 90 度，实现开启、锁闭

1. Material: zinc alloy shell, knob, word wheel, carbon steel lock/hook
2. Surface treatment: shell, knob chrome/black plating, word wheel nickel plating, lock plate nickel plating, appearance color can be customized according to requirements
3. Functions and uses: Rotate the handle 90 degrees to realize opening and locking

RL 左右通用 | 锌合金 Zinc alloy | IP54

型号 (Model)

灯箱锁

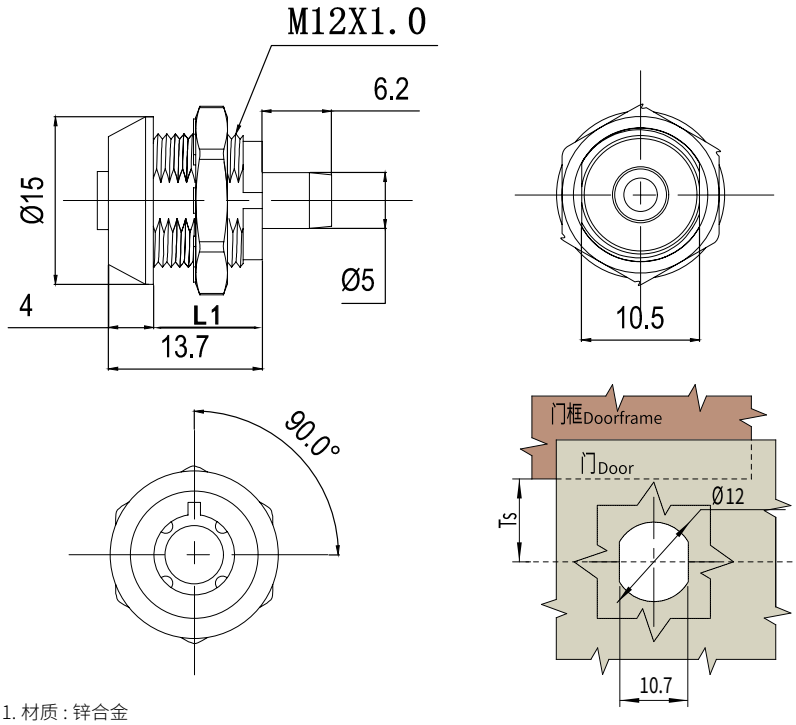

1. 材质 : 锌合金
2. 表面处理 : 镀亮铬
3. 功能及用途 : 用钥匙旋转 90 度，实现开启和锁闭功能

1. Material: Zinc alloy
2. Surface treatment: bright chrome plating
3. Functions and uses: Rotate 90 degrees with the key to realize the function of opening and locking